Current part is item (19) on diagram. Available at www.oshkoshequipment.com

(1) SMR Code	(2) Federal Stock Number	(3) DESCRIPTION Reference Number & Mfr. Code	Usable On Code	(4) UNIT OF meas	(5) QTY inc. in Unit	(6) 30-day pos maint allowance (a) 1-20	(b) 21-50	(c) 51-100	(7) 30-day pos maint allowance (a) 1-20	(b) 21-50	(c) 51-100	(8) alw per 100 equip cnt-gcy	(9) repair maint alw per 100 equip	(10) Illustration (a) Figure No.	(b) Item No.
		1812-SPECIAL PURPOSE BODIES-CONTINUED													
		NON-ILLUSTRATED-CONTINUED													
P-F	5930-679-15	SWITCH,PUSH:SOLID SIDE	CE,CF,CG	EA	2	*	*	*	*	*	*	6	8		
		8342288 (19207)													
P-O	5975-335-25	TUBE,FLEXIBLE,NONMETALLIC:	CE,CF,CG	FT	V	*	*	*	*	*	*	3	5		
		8376125 (19207)													
		GROUP 20-HOIST,WINCH AND POWER													
		CONTROL AND POWER													
		TAKE-OFF													
		2001-HOIST,WINCH,CRANE ASSEMBLY													
P-O-R	2590-741-11	WINCH ASSEMBLY:FRONT	HA,JA,FJ	EA	1	*	*	*	*	*	*	6	10	208	1
		7411122 (19207)													
P-F	2590-121-07	SHEAVE ASSEMBLY,WINCH:		EA	1	*	*	*	*	*	*	4	5	208	2
		7954483 (19207)													
P-F	5305-054-92	SCREW,CAP,HEXAGON HEAD:		EA	2	*	*	*	*	*	*	6	10	208	3
		TRACK ASSEMBLY													
		MS51955-77 (96906)													
P-F	5310-834-87	NUT,PLAIN:TRACK ASSEMBLY		EA	4	*	*	*	*	*	*	6	10	208	4
		MS356919-33 (96906)													
P-F	5305-044-55	SCREW,CAP,HEXAGON HEAD:		EA	1	*	*	*	*	*	*	6	10	208	5
		MS90725-160 (96906)													
P-F	5310-820-66	WASHER,LOCK:TRACK ASSEMBLY		EA	1	*	*	*	*	*	*	6	10	208	6
		MS35338-50 (96906)													
X1		TRACK ASSEMBLY:			1									208	7
		8344234 (19207)													
P-O	2590-641-64	WINCH,ASSEMBLY:WITH ROLLER	HA,JA,FJ	EA	1	*	*	*	*	*	*	6	10	208	8
		7412382 (19207)													
P-F	2590-118-55	DRUM ASSEMBLY,WINCH:		EA	1	*	*	*	*	*	*	4	5	208	9
		7954477 (19207)													
P-F	5305-051-08	SCREW,CAP,HEXAGON HEAD:		EA	4	*	*	*	*	*	*	6	10	208	10
		ROLLER ASSEMBLY													
		MS90725-164 (96906)													
P-F	5310-820-66	WASHER,LOCK:ROLLER ASSEMBLY		EA	4	*	*	*	*	*	*	6	10	208	11
		MS35338-51 (96906)													
P-F	5310-584-78	WASHER,LOCK:ROLLER ASSEMBLY		EA	12	*	*	*	*	*	*	6	10	208	12
		MS35338-51 (96906)													
P-F	5310-584-78	WASHER,LOCK:ROLLER ASSEMBLY		EA	12	*	*	*	*	*	*	6	10	208	12
		MS35338-51 (96906)													
P-F	5305-939-92	SCREW,CAP,HEXAGON HEAD:		EA	12	*	*	*	*	*	*	6	10	208	13
		ROLLER ASSEMBLY													
		MS90725-187 (96906)													

Current part is item (19) on diagram. Available at www.oshkoshequipment.com

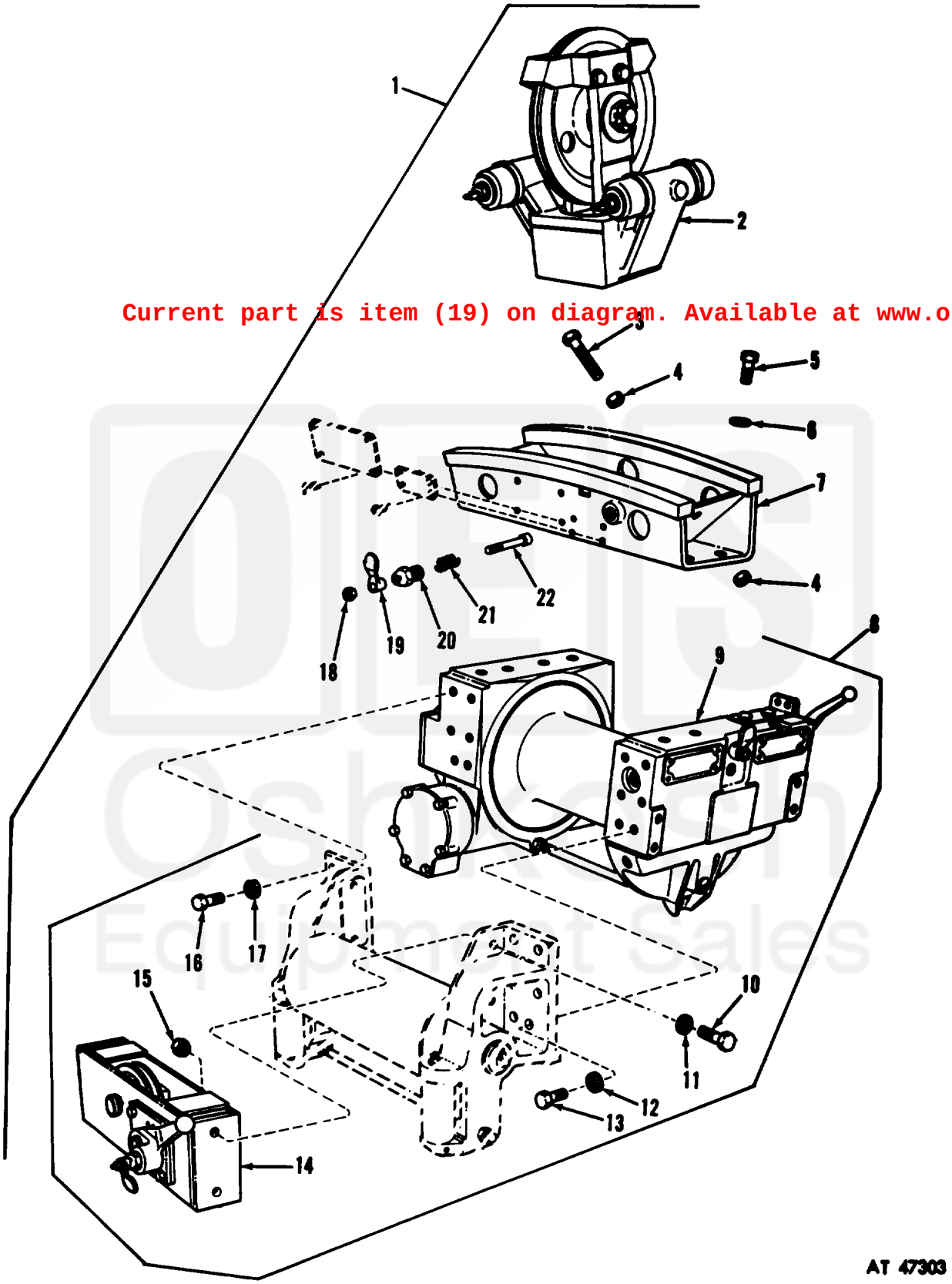

Current part is item (19) on diagram. Available at www.oshkoshequip

Figure 208. Front winch assembly.

Current part is item (19) on diagram. Available at www.oshkoshequip